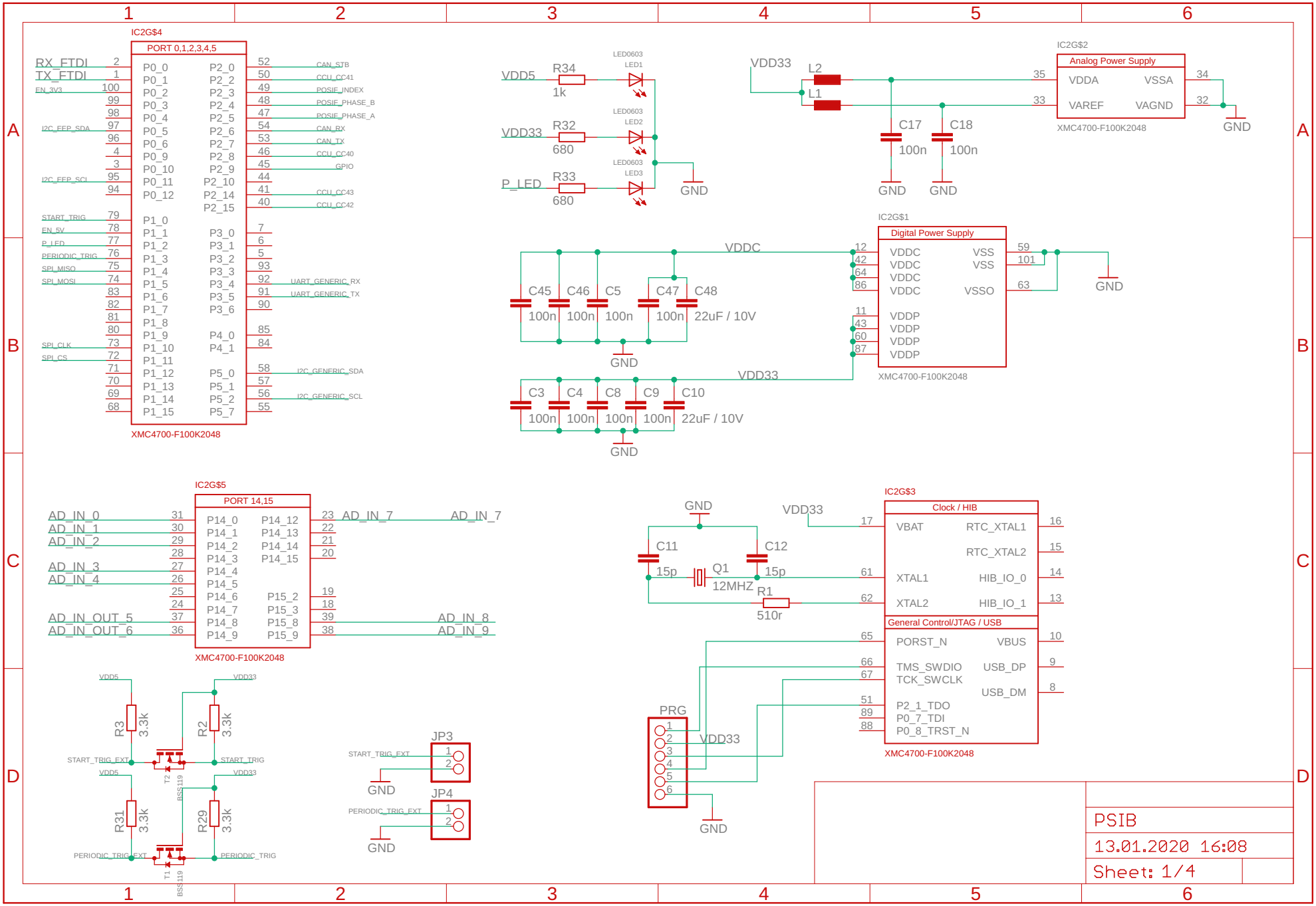
IC2G$4
PORT 0,1,2,3,4,5
XMC4700-F100K2048
RX_FTDI
TX_FTDI
EN_3V3
I2C_FFP_SDA
I2C_FFP_SCL
START_TRIG
EN_5V
P_LED
PERIODIC_TRIG
SPI_MISO
SPI_MOSI
SPI_CLK
SPI_CS
CAN_STB
CCU_CC41
POSIE_INDEX
POSIE_PHASE_B
POSIE_PHASE_A
CAN_RX
CAN_TX
CCU_CC40
GPIO
CCU_CC43
CCU_CC42
UART_GENERIC_RX
UART_GENERIC_TX
I2C_GENERIC_SDA
I2C_GENERIC_SCL
VDD5
R34
1k
LED0603
LED1
VDD33
R32
680
LED2
P_LED
R33
680
LED3
GND
IC2G$2
Analog Power Supply
VDDA
VSSA
VAREF
VAGND
XMC4700-F100K2048
L2
L1
C17
C18
100n
IC2G$1
Digital Power Supply
VDDC
VSS
VSSO
VDDP
C45
C46
C5
C47
C48
22uF / 10V
C3
C4
C8
C9
C10
IC2G$5
PORT 14,15
AD_IN_0
AD_IN_1
AD_IN_2
AD_IN_3
AD_IN_4
AD_IN_OUT_5
AD_IN_OUT_6
AD_IN_7
AD_IN_8
AD_IN_9
IC2G$3
Clock / HIB
VBAT
RTC_XTAL1
RTC_XTAL2
XTAL1
XTAL2
HIB_IO_0
HIB_IO_1
General Control/JTAG / USB
PORST_N
VBUS
TMS_SWDIO
TCK_SWCLK
USB_DP
USB_DM
P2_1_TDO
P0_7_TDI
P0_8_TRST_N
C11
C12
15p
Q1
12MHZ
R1
510r
PRG
R3
R2
R31
R29
3.3k
T1
T2
BSS119
JP3
JP4
PSIB
13.01.2020 16:08
Sheet: 1/4

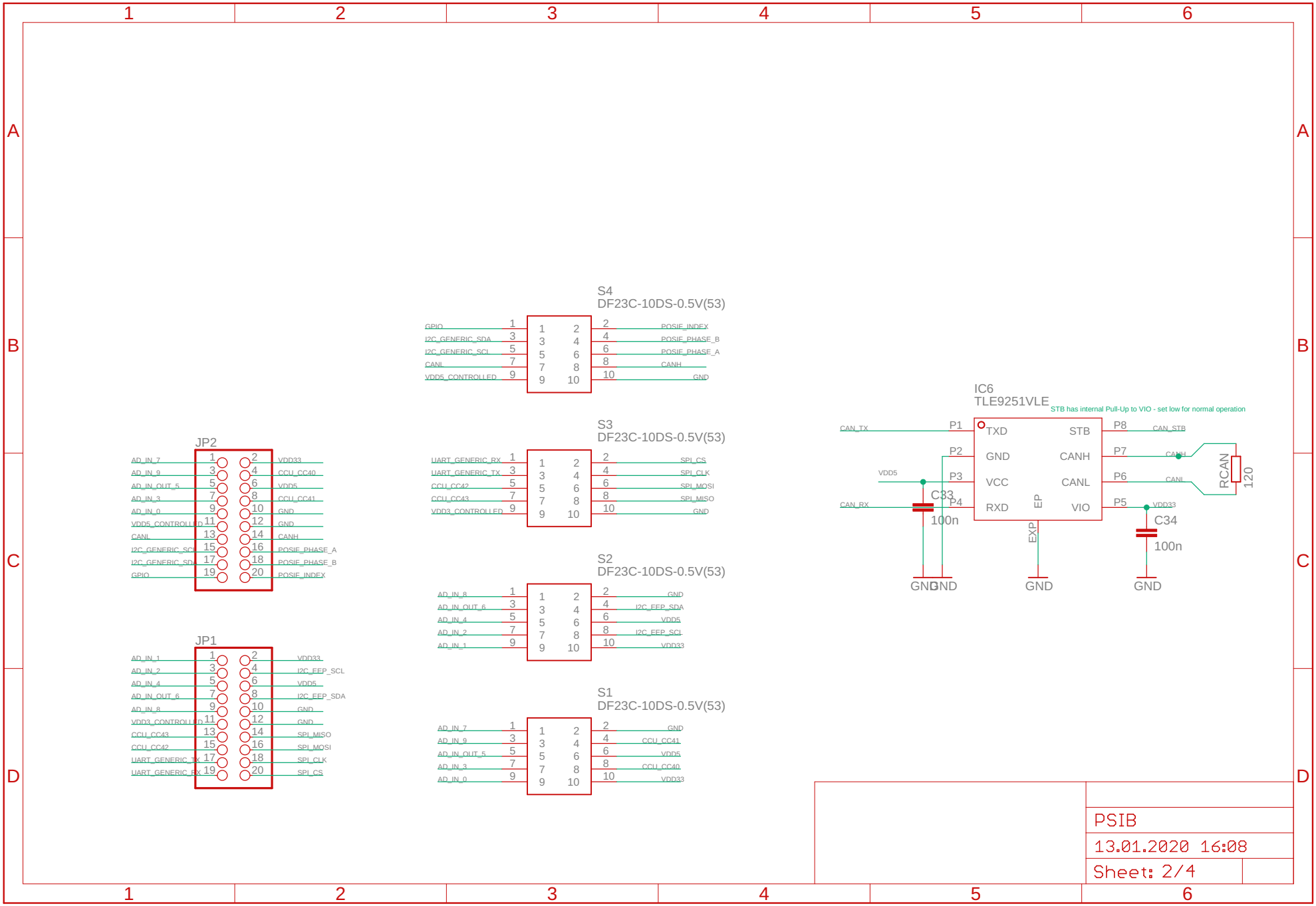
1
2
3
4
5
6
A
B
C
D
JP2
AD_IN_7 1
AD_IN_9 3
AD_IN_OUT_5 5
AD_IN_3 7
AD_IN_0 9
VDD5_CONTROLLED 11
CANL 13
I2C_GENERIC_SCL 15
I2C_GENERIC_SDA 17
GPIO 19
2 VDD33
4 CCU_CC40
6 VDD5
8 CCU_CC41
10 GND
12 GND
14 CANH
16 POSIE_PHASE_A
18 POSIE_PHASE_B
20 POSIE_INDEX
JP1
AD_IN_1 1
AD_IN_2 3
AD_IN_4 5
AD_IN_OUT_6 7
AD_IN_8 9
VDD3_CONTROLLED 11
CCU_CC43 13
CCU_CC42 15
UART_GENERIC_TX 17
UART_GENERIC_RX 19
2 VDD33
4 I2C_EEP_SCL
6 VDD5
8 I2C_EEP_SDA
10 GND
12 GND
14 SPI_MISO
16 SPI_MOSI
18 SPI_CLK
20 SPI_CS
S4
DF23C-10DS-0.5V(53)
GPIO 1
I2C_GENERIC_SDA 3
I2C_GENERIC_SCL 5
CANL 7
VDD5_CONTROLLED 9
2 POSIE_INDEX
4 POSIE_PHASE_B
6 POSIE_PHASE_A
8 CANH
10 GND
S3
DF23C-10DS-0.5V(53)
UART_GENERIC_RX 1
UART_GENERIC_TX 3
CCU_CC42 5
CCU_CC43 7
VDD3_CONTROLLED 9
2 SPI_CS
4 SPI_CLK
6 SPI_MOSI
8 SPI_MISO
10 GND
S2
DF23C-10DS-0.5V(53)
AD_IN_8 1
AD_IN_OUT_6 3
AD_IN_4 5
AD_IN_2 7
AD_IN_1 9
2 GND
4 I2C_EEP_SDA
6 VDD5
8 I2C_EEP_SCL
10 VDD33
S1
DF23C-10DS-0.5V(53)
AD_IN_7 1
AD_IN_9 3
AD_IN_OUT_5 5
AD_IN_3 7
AD_IN_0 9
2 GND
4 CCU_CC41
6 VDD5
8 CCU_CC40
10 VDD33
IC6
TLE9251VLE
STB has internal Pull-Up to VIO - set low for normal operation
CAN_TX
CAN_RX
VDD5
C33
100n
GND
P1 TXD
P2 GND
P3 VCC
P4 RXD
EP
EXP
GND
STB P8 CAN_STB
CANH P7 CANH
CANL P6 CANL
VIO P5 VDD33
RCAN
120
C34
100n
GND
PSIB
13.01.2020 16:08
Sheet: 2/4

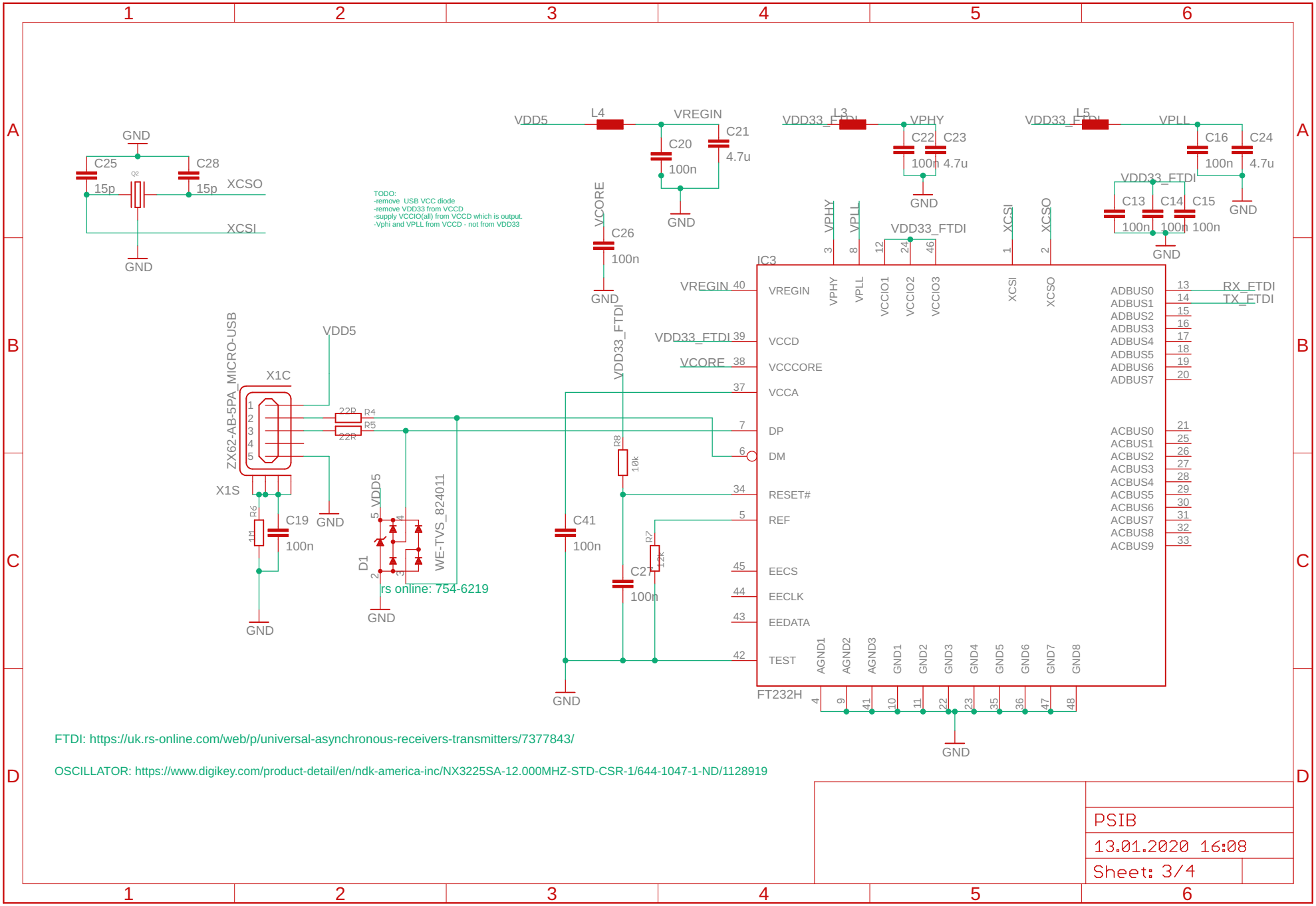
GND
C25
15p
Q2
C28
15p
XCSO
XCSI
GND
VDD5
L4
VREGIN
C21
4.7u
C20
100n
GND
VDD33_FTDI
L3
VPHY
C22
100n
C23
4.7u
GND
VDD33_FTDI
L5
VPLL
C16
100n
C24
4.7u
VDD33_FTDI
C13
100n
C14
100n
C15
100n
GND
TODO:
-remove USB VCC diode
-remove VDD33 from VCCD
-supply VCCIO(all) from VCCD which is output.
-Vphi and VPLL from VCCD - not from VDD33
VCORE
C26
100n
GND
VDD33_FTDI
IC3
VREGIN 40
VDD33_FTDI 39
VCORE 38
37
7
6
34
5
45
44
43
42
VREGIN
VCCD
VCCCORE
VCCA
DP
DM
RESET#
REF
EECS
EECLK
EEDATA
TEST
VPHY
VPLL
VCCIO1
VCCIO2
VCCIO3
XCSI
XCSO
AGND1
AGND2
AGND3
GND1
GND2
GND3
GND4
GND5
GND6
GND7
GND8
FT232H
ADBUS0
ADBUS1
ADBUS2
ADBUS3
ADBUS4
ADBUS5
ADBUS6
ADBUS7
ACBUS0
ACBUS1
ACBUS2
ACBUS3
ACBUS4
ACBUS5
ACBUS6
ACBUS7
ACBUS8
ACBUS9
RX_FTDI
TX_FTDI
X1C
ZX62-AB-5PA_MICRO-USB
X1S
VDD5
22R
R4
22R
R5
R6
1M
C19
100n
GND
D1
WE-TVS_824011
rs online: 754-6219
GND
R8
10k
C41
100n
C27
100n
R7
12k
GND
GND
FTDI: https://uk.rs-online.com/web/p/universal-asynchronous-receivers-transmitters/7377843/
OSCILLATOR: https://www.digikey.com/product-detail/en/ndk-america-inc/NX3225SA-12.000MHZ-STD-CSR-1/644-1047-1-ND/1128919
PSIB
13.01.2020 16:08
Sheet: 3/4

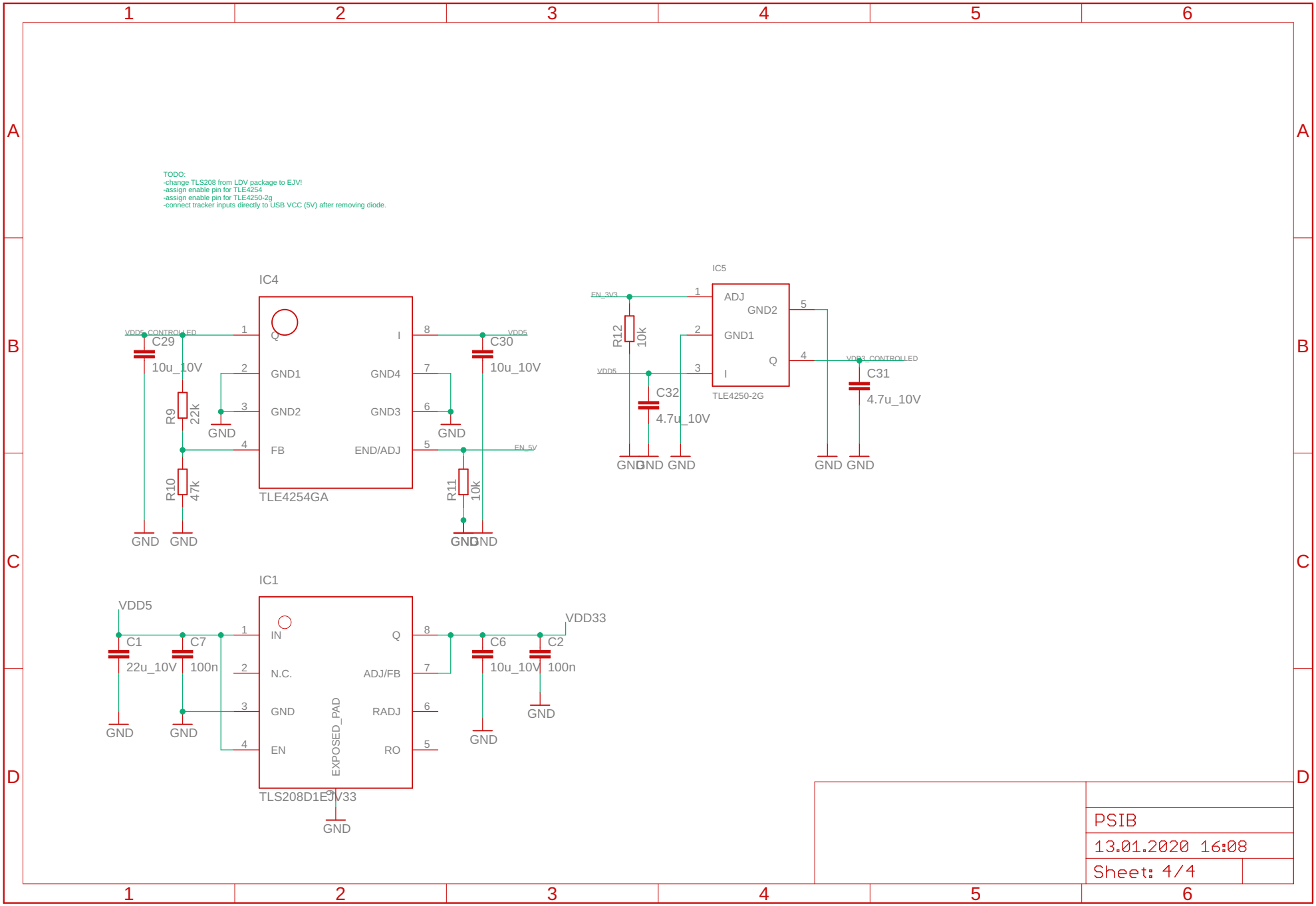

09.03.2021 13:02 C:\Users\tarcatu\Desktop\projects\DualDieAnalogAngle\hardware\new generation\MainBoard\PSIB.sch (Sheet: 4/4)